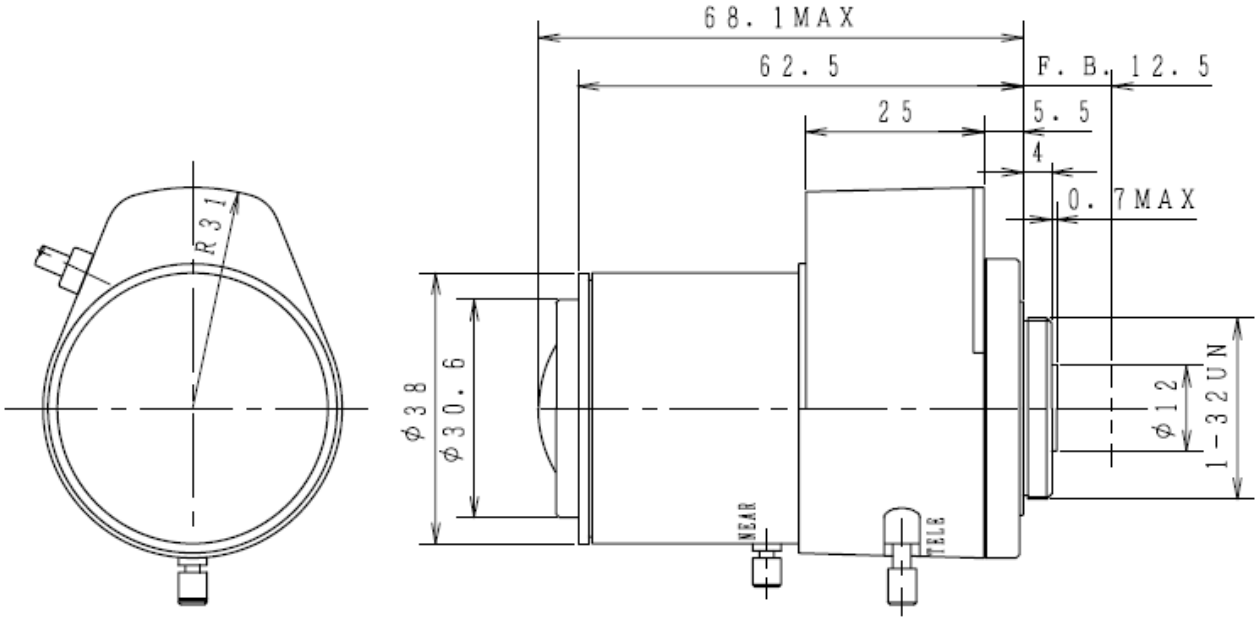


## SPECIFICATION

AUTO IRIS

| | | | | | |
|---|---|---|---|---|---|
| 1. USE | | FOR 1/3″ B/W COLOR CAMERA | | | |
| 2. FOCAL LENGTH | | 2.7-12mm | | | |
| 3. ZOOM RATIO | | 4.5x | | | |
| 4. MAX. DIA. RATIO | | F1.4 | | | |
| 5. IRIS RANGE | | F1.4-360 | | | |
| 6. IMAGE SIZE | | φ 6 | | | |
| 7. BACK FOCAL LENGTH | | W 8.52mm | T 20.77mm | in air | |
| 8. FLANGE FOCAL LENGTH | | 12.5mm | | in air | |
| 9. FOCUS RANGE | | 0.25m | | | |
| 10. FIELD ANGLE | DIA. | W 118.0° | T 27.0° | | |
| | HOR. HOR. | 96.0° | 22.6° | | |
| | VER. | 72.6° | 17.1° | | |
| 11. FIELD OF VIEW AT M.O.D. | DIA. | W --- mm | T --- mm | | |
| | HOR. | 58.0mm | 11.2mm | | |
| | VER. | 38.5mm | 8.4mm | | |
| 12. CLEAR APERTURE | FRONT | φ 30.6 | | | |
| 13. CLEAR APERTURE | REAR | φ 12.0 | | | |
| 14. EXIT PUPIL POSITION | | --- | | | |
| 15. MOUNT | | CS-MOUNT | | | |
| 16. FILTER SCREW SIZE | | --- | | | |
| 17. DISTORTION (TV) | | W --- % | T --- % | | |
| 18. WEIGHT | | 80g | | | |

DC (DIRECT CONTROL)

| | | | |
|---|---|---|---|
| DRIVE COIL | RESISTOR | 200Ω | (20° C) |
| | COLOR | RED (+) | BLACK(−) |
| BRAKE COIL | RESISTOR | 730 Ω | (20° C) |
| | COLOR | YELLOW(+) | ORANGE(−) |
| DRIVE VOLT. | OPEN | LESS THAN +4.0V | |
| | CLOSE | OVER THAN 0.5V | |
| | | | |

1/3″ F1.4 / 2.7-12mm

LMVZ272A