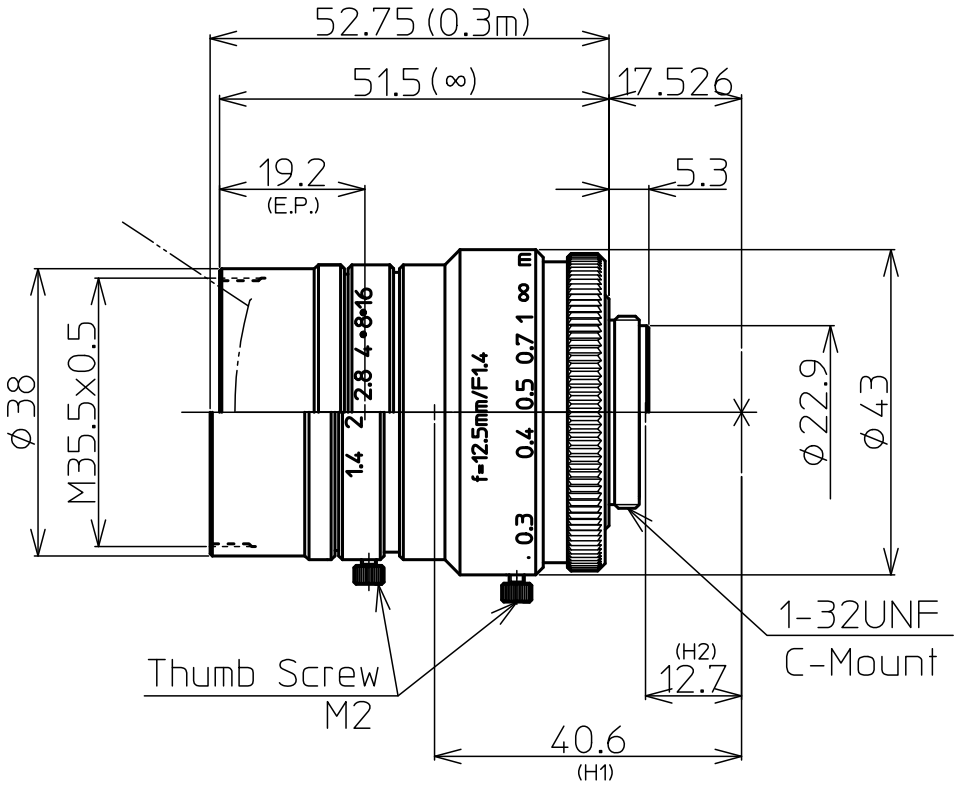

1" 1.4/12.5mm C		1"	2/3"	1/1.8"
FOCAL LENGTH		f=12.5mm		
MAX. DIAMETER (RATIO)		F=1:1.4~16		
PICTURE SIZE		9.6x12.8mm	6.6x8.8mm	5.4x7.2mm
ANGLE	VER. ANGLE	42.5°	29.5°	24.2°
	HOR. ANGLE	55.6°	39.1°	32.1°
	DIA. ANGLE	67.6°	48.3°	39.9°
DISTORTION (TV)		-1.58%		
SHOOTIG RANGE AT	VER.	243.5mm	165.2mm	134.6mm
MINIMUM FOCUS	HOR.	330.6mm	222.4mm	180.6mm
DISTANCE	DIA.	420.6mm	281.3mm	227.7mm
MINIMUM FOCUS DISTANCE		0.3m		
FLANGE BACK		17.526mm in air		
BACK FOCUS		12.6mm in air		
FILTER SCREW SIZE		M35.5x0.5		
FRONT/REAR EFFECTIVE DIA.		FRONT φ28.1mm	REAR φ17.5mm	
MOUNT		C-MOUNT		
EXIT PUPIL		-45.9mm		
TEMPERATURE RANGE		-10~+50°C		
STORAGE TEMPERATURE RANGE		-20~+60°C		
RESOLUTION CENTER/CORNER		CENTER 100lp/mm	CORNER 80lp/mm	
WEIGHT		160 g		

NOTE:Specifications and availability are subject to change without notice

注）本仕様については、予告なしに変更する場合があります。

		尺度 1/1	工場番号 HR976NCN-3H
		機種名	1" F1.4 f=12.5mm
2014.12.25	更新	機種番	LM12HC 外観図
2013.4.15	作成年月日		