CONFIDENTIAL

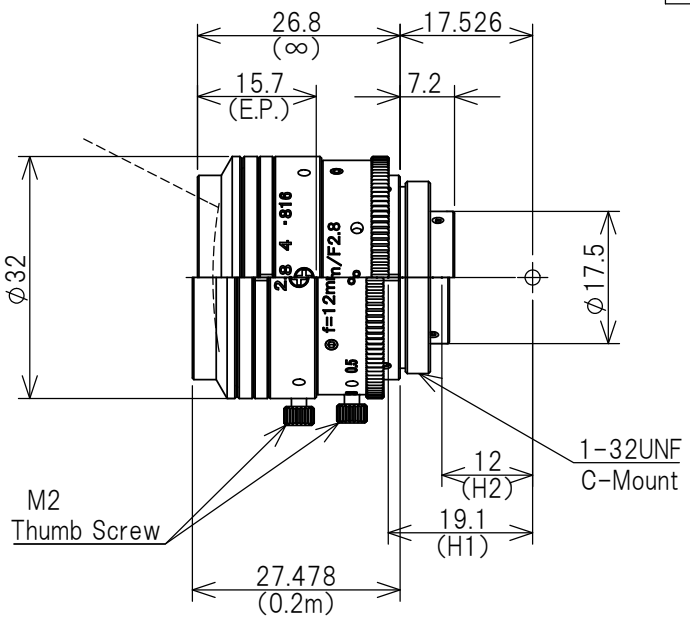

2/3″ 2.8/12mm C		2/3″	1/1.8″	1/2″
FOCAL LENGTH		f=12mm		
F-NUMBER		F=2.8-16		
PICTURE SIZE		6.6×8.8mm	5.4×7.2mm	4.8×6.4mm
ANGLE OF VIEW (∞)	VER.ANGLE	31.2°	25.6°	22.8°
	HOR.ANGLE	41.0°	33.9°	30.3°
	DIA.ANGLE	50.2°	41.9°	37.5°
DISTORSION (TV)		-0.43%	-0.46%	-0.42%
FIELD OF VIEW (MINIMUM FOCUS DISTANCE)	VER.	118mm	96mm	86mm
	HOR.	159mm	129mm	115mm
	DIA.	200mm	163mm	144mm
MINIMUM FOCUS DISTANCE		0.2m		
FLANGE BACK		17.526mm in air		
BACK FOCUS		12.6mm in air		
FILTER SCREW SIZE		None		
FRONT/REAR EFFECTIVE DIA.		FRONT φ18.5mm REAR φ13.5mm		
MOUNT		C-MOUNT		
EXIT PUPIL		-58.7mm		
TEMPERATURE RANGE		-10～+50℃		
STORANGE TEMPERATURE RANGE		-20～+60℃		
RESOLUTION CENTER/CORNER		CENTER 160lp/mm CORNER 100lp/mm		
WEIGHT		55g		

NOTE:Specifications and availability are subject to change without notice
注）本仕様については、予告なしに変更する場合があります。

日付	内容		
		尺度 1:1	工場番号 S10-633
2019/09/26	誤記訂正	機種名 2/3″ f=12mm F2.8 5MP	
2019/02/08	作成	機種番 LM12JC5MC 外観図	