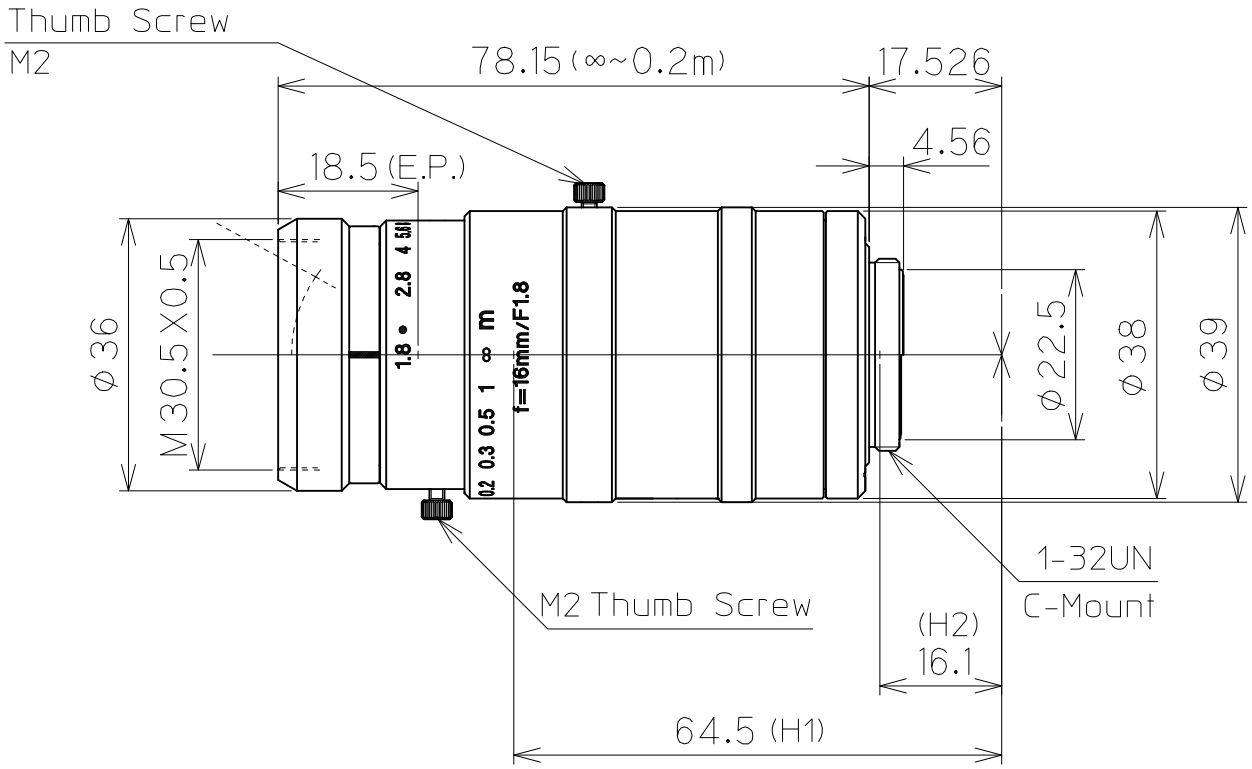

1" 1.8/16mm C		1"	2/3"	1/1.8"
FOCAL LENGTH		f=16mm		
F-NUMBER		F=1.8-16		
PICTURE SIZE		9.6x12.8mm	6.6x8.8mm	5.4x7.2mm
ANGLE OF VIEW (∞)	VER. ANGLE	33.6°	23.3°	19.1°
	HOR. ANGLE	44.2°	31.0°	25.4°
	DIA. ANGLE	54.2°	38.4°	31.6°
DISTORTION (TV)		-0.81%	-0.55%	-0.41%
FIELD OF VIEW (MINIMUM FOCUS DISTANCE)	VER.	129mm	88mm	72mm
	HOR.	174mm	118mm	97mm
	DIA.	220mm	149mm	121mm
MINIMUM FOCUS DISTANCE		0.2m		
FLANGE BACK		17.526mm in air		
BACK FOCUS		15.0mm in air		
FILTER SCREW SIZE		M30.5x0.5		
FRONT/REAR EFFECTIVE DIA.		FRONT φ20.6mm REAR φ15.3mm		
MOUNT		C-MOUNT		
EXIT PUPIL		-82.8mm		
TEMPERATURE RANGE		-10~+50°C		
STORAGE TEMPERATURE RANGE		-20~+60°C		
RESOLUTION CENTER/CORNER		CENTER 160lp/mm CORNER 100lp/mm		
WEIGHT		xxxg		

NOTE:Specifications and availability are subject to change without notice

注）本仕様については、予告なしに変更する場合があります。

		尺度 1/1	工場番号 LM16HC-VS
		機種名 1" f=16mm F1.8 VIS-SWIR	
2020.10.23	作成年月日	機種番 LM16HC-VIS-SW	S10-704