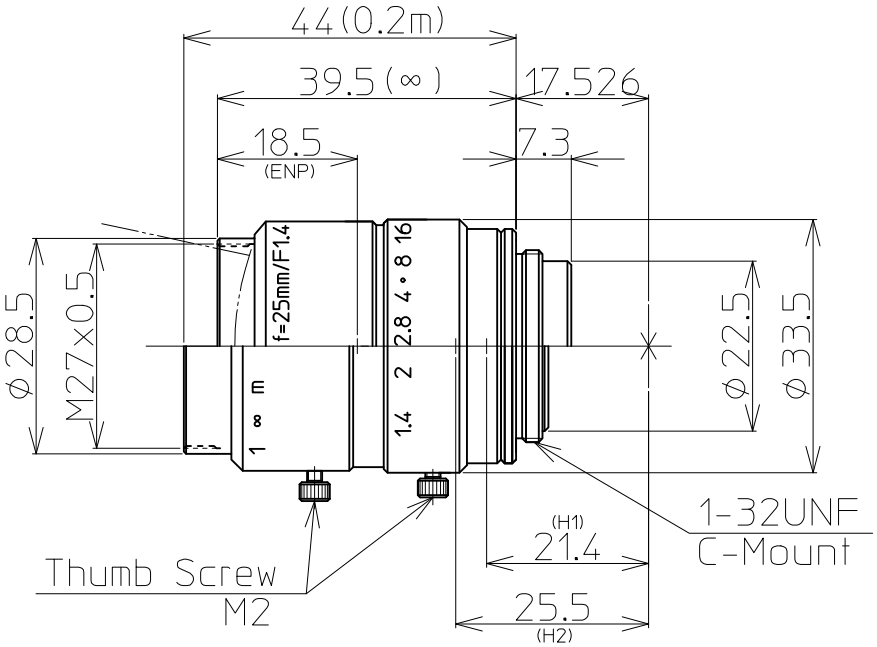

2/3" 1.4/25mm C		2/3"	1/1.8"	1/2"
FOCAL LENGTH		f=25mm		
MAX. DIAMETER (RATIO)		F=1:1.4~16		
PICTURE SIZE		6.6×8.8mm		
ANGLE	VER. ANGLE	14.8°	12.1°	10.5°
	HOR. ANGLE	19.6°	16.1°	14.0°
	DIA. ANGLE	24.3°	20.0°	17.8°
DISTORTION (TV)		-0.04%		
SHOOTING RANGE AT	VER.	53.3mm	43.4mm	38.6mm
MINIMUM FOCUS	HOR.	71.1mm	57.9mm	51.4mm
DISTANCE	DIA.	88.6mm	72.4mm	64.3mm
MINIMUM FOCUS DISTANCE		0.2m		
FLANGE BACK		17.526mm in air		
BACK FOCUS		11.7mm in air		
FILTER SCREW SIZE		M27×0.5		
FRONT/REAR EFFECTIVE DIA.		FRONT φ24.0mm	REAR φ12.8mm	
MOUNT		C-MOUNT		
EXIT PUPIL		-77.0mm		
TEMPERATURE RANGE		-10~+50°C		
STORAGE TEMPERATURE RANGE		-20~+60°C		
RESOLUTION CENTER/CORNER		CENTER 100lp/mm	CORNER 80lp/mm	
WEIGHT		90 g		

NOTE:Specifications and availability are subject to change without notice

注）本仕様については、予告なしに変更する場合があります。

		尺度 1/1	工場番号 HR940KW
		機種名 2/3" F1.4 f=25mm	
2013.11.21	更新	機種番 LM25JC1MS 外観図	
2013.4.15	作成年月日		