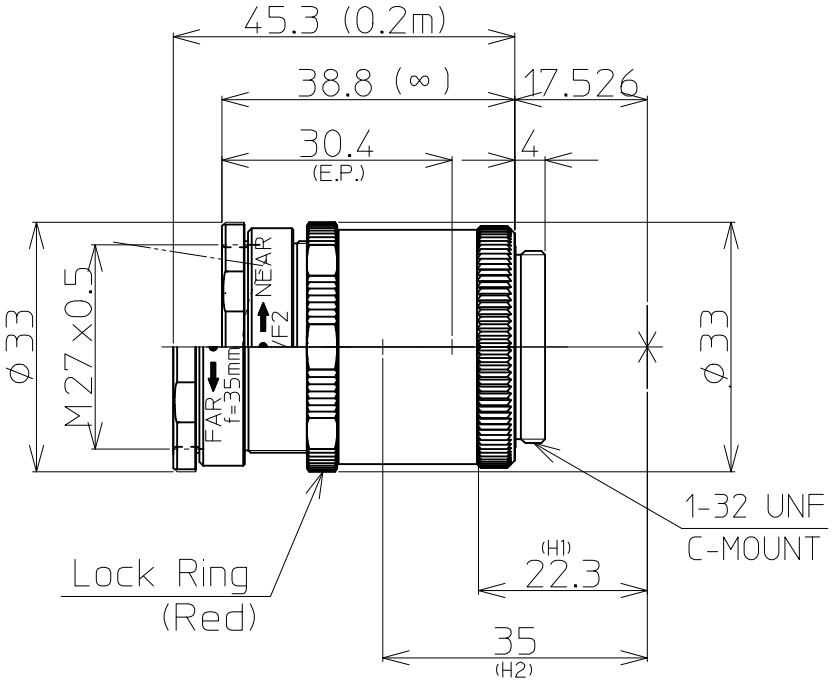


| 2/3" 2/35mm C | | 2/3" | 1/1.8" | 1/2" |
|---|---|---|---|---|
| FOCAL LENGTH | | f=35mm | | |
| MAX. DIAMETER (RATIO) | | F=1:2,4,8,16 | | |
| ELEMENT | | 4群 7枚 | | |
| PICTURE SIZE | | 6.6×8.8mm | 5.4×7.2 | 4.8×6.4 |
| ANGLE | VER. ANGLE | 10.8° | 8.8° | 7.9° |
| | HOR. ANGLE | 14.4° | 11.8° | 10.5° |
| | DIA. ANGLE | 17.9° | 14.7° | 13.1° |
| DISTORTION (TV) | | -0.2% | | |
| SHOOTING RANGE AT | VER. | 35.8mm | 29.3 | 26.0 |
| MINIMUM FOCUS | HOR. | 47.9mm | 39.1 | 34.7 |
| DISTANCE | DIA. | 60.0mm | 49.0 | 43.5 |
| MINIMUM FOCUS DISTANCE | | 0.2m | | |
| FLANGE BACK | | 17.526 mm in air | | |
| BACK FOCUS | | 19.9mm in air (Mechanical 14.0mm in air) | | |
| FILTER SCREW SIZE | | M27.0×0.5 | | |
| FRONT/REAR EFFECTIVE DIA. | | FRONT φ21.5mm REAR φ11.7mm | | |
| MOUNT | | C-MOUNT | | |
| EXIT PUPIL | | -38.8mm | | |
| TEMPERATURE RANGE | | -10~+50°C | | |
| STORAGE TEMPERATURE RANGE | | -40~+60°C | | |
| RESOLUTION CENTER/CORNER | | CENTER 100lp/mm CORNER 80lp/mm | | |
| WEIGHT | | 65g | | |

NOTE:Specifications and availability are subject to change without notice
注）本仕様については、予告なしに変更する場合があります。

| | | | |
|---|---|---|---|
| | | 尺度 1/1 | 工場番号 HR964WP |
| | | 機種名 | 2/3" F2 35mm |
| 2018.05.31 | 作成年月日 | 機種番 | LM35JCM-WP 外観図 |