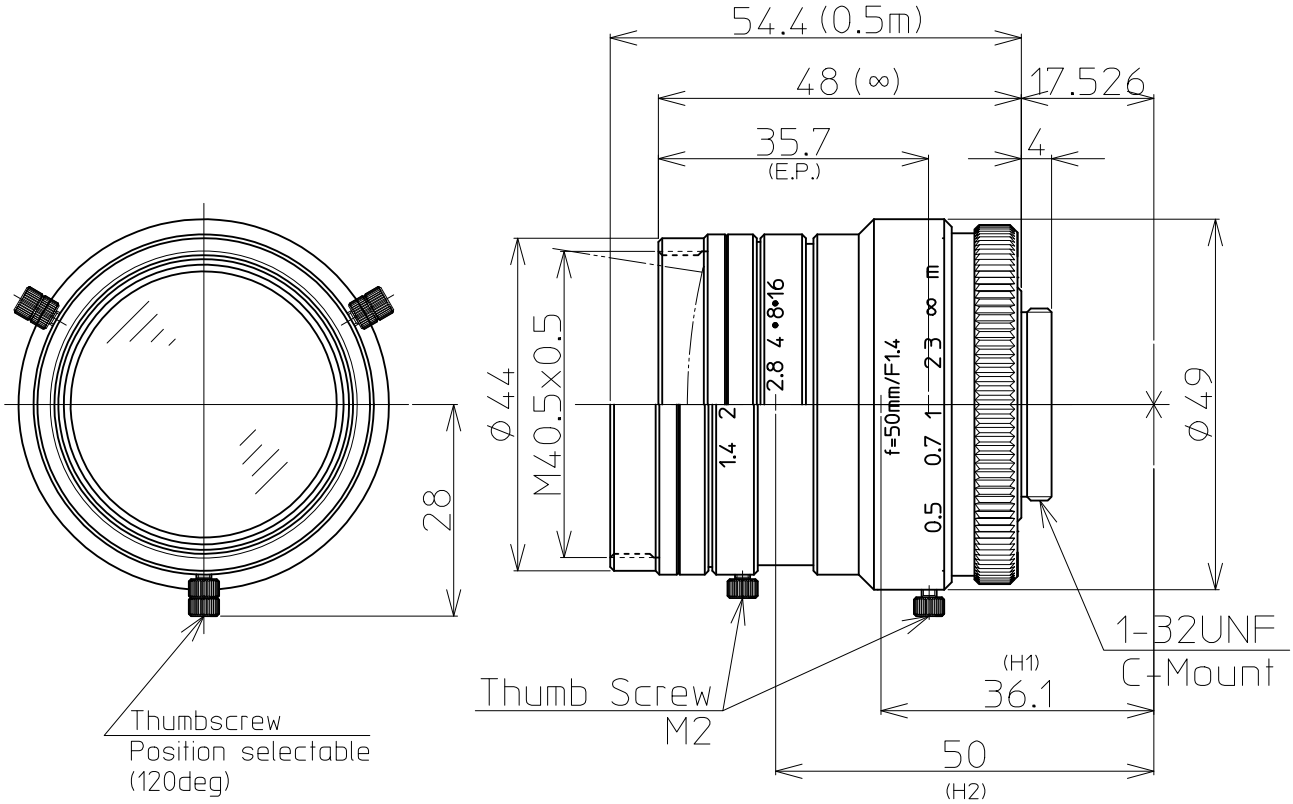

1" 1.4/50mm C		1"	2/3"	1/1.8"
FOCAL LENGTH		f=50mm		
MAX. DIAMETER (RATIO)		F=1:1.4~16		
PICTURE SIZE		9.6x12.8mm	6.6x8.8mm	5.4x7.2mm
ANGLE	VER. ANGLE	10.8°	7.5°	6.2°
	HOR. ANGLE	14.5°	10.0°	8.2°
	DIA. ANGLE	18.0°	12.5°	10.2°
DISTORTION (TV)		0.05%		
SHOOTING RANGE AT	VER.	91.3mm	62.9mm	51.4mm
MINIMUM FOCUS	HOR.	121.8mm	83.8mm	68.6mm
DISTANCE	DIA.	152.9mm	104.8m	85.7mm
MINIMUM FOCUS DISTANCE		0.5m		
FLANGE BACK		17.526mm in air		
BACK FOCUS		14.8mm in air		
FILTER SCREW SIZE		M40.5x0.5		
FRONT/REAR EFFECTIVE DIA.		FRONT φ35.0mm	REAR φ15.5mm	
MOUNT		C-MOUNT		
EXIT PUPIL		-44.4mm		
TEMPERATURE RANGE		-10~+50°C		
STORAGE TEMPERATURE RANGE		-20~+60°C		
RESOLUTION CENTER/CORNER		CENTER 100lp/mm	CORNER 80lp/mm	
WEIGHT		210 g		

NOTE:Specifications and availability are subject to change without notice

注）本仕様については、予告なしに変更する場合があります。

		尺度 1/1	工場番号 HR980SW
		機種名 1" F1.4 f=50mm	
2015.7.30	正面図追加		
2014.12.25	更新	機種番 LM50HC-SW	
2013.4.15	作成年月日		