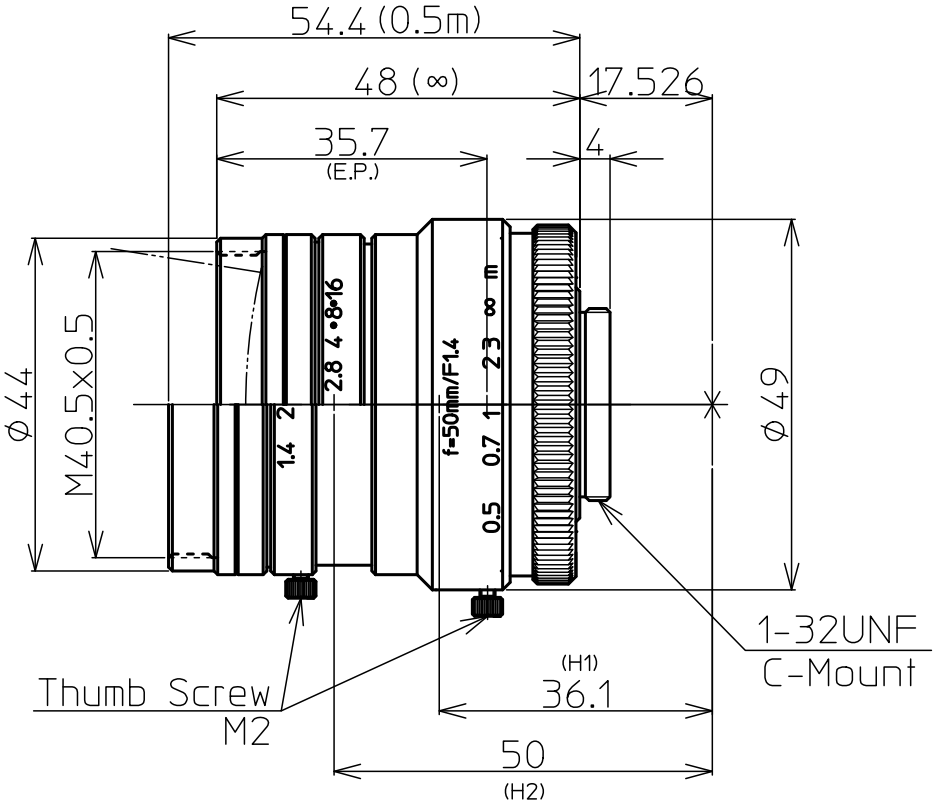

1" 1.4/50mm C		1"	2/3"	1/1.8"
FOCAL LENGTH		f=50mm		
MAX. DIAMETER (RATIO)		F=1:1.4~16		
PICTURE SIZE		9.6x12.8mm	6.6x8.8mm	5.4x7.2mm
ANGLE	VER. ANGLE	10.8°	7.5°	6.2°
	HOR. ANGLE	14.5°	10.0°	8.2°
	DIA. ANGLE	18.0°	12.5°	10.2°
DISTORTION (TV)		0.05%		
SHOOTIG RANGE AT MINIMUM FOCUS DISTANCE	VER.	91.3mm	62.9mm	51.4mm
	HOR.	121.8mm	83.8mm	68.6mm
	DIA.	152.9mm	104.8m	85.7mm
MINIMUM FOCUS DISTANCE		0.5m		
FLANGE BACK		17.526mm in air		
BACK FOCUS		14.8mm in air		
FILTER SCREW SIZE		M40.5x0.5		
FRONT/REAR EFFECTIVE DIA.		FRONT φ35.0mm REAR φ15.5mm		
MOUNT		C-MOUNT		
EXIT PUPIL		-44.4mm		
TEMPERATURE RANGE		-10~+50°C		
STORAGE TEMPERATURE RANGE		-20~+60°C		
RESOLUTION CENTER/CORNER		CENTER 100lp/mm CORNER 80lp/mm		
WEIGHT		210 g		

NOTE:Specifications and availability are subject to change without notice

注）本仕様については、予告なしに変更する場合があります。

		尺度 1/1	工場番号 HR980NCN-3H
		機種名 1" F1.4 f=50mm	
2014.12.25	更新	機種番 LM50HC 外観図	
2013.4.15	作成年月日		