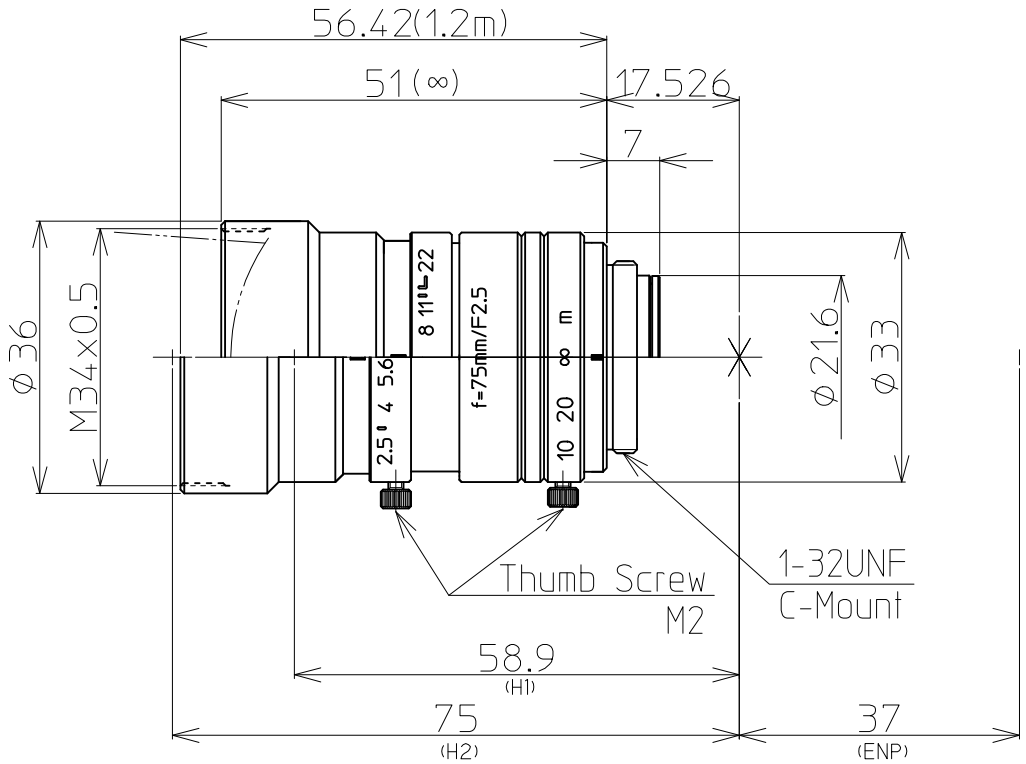

2/3" 2.5/75mm C		2/3"	1/1.8"	1/2"
FOCAL LENGTH		f=75mm		
MAX. DIAMETER (RATIO)		F=1:2.5~22		
PICTURE SIZE		6.6x8.8mm		
ANGLE	VER. ANGLE	5.0°	4.1°	3.7°
	HOR. ANGLE	6.7°	5.5°	4.9°
	DIA. ANGLE	8.3°	6.8°	6.0°
DISTORTION (TV)		-0.1%		
SHOOTING RANGE AT	VER.	99.6mm	81.5mm	72.5mm
MINIMUM FOCUS	HOR.	132.6mm	108.6mm	96.6mm
DISTANCE	DIA.	165.6mm	135.7mm	120.7mm
MINIMUM FOCUS DISTANCE		1.2m		
FLANGE BACK		17.526mm in air		
BACK FOCUS		18.0mm in air		
FILTER SCREW SIZE		M34x0.5		
FRONT/REAR EFFECTIVE DIA.		FRONT φ30.2mm	REAR φ12.4mm	
MOUNT		C-MOUNT		
EXIT PUPIL		-32.9mm		
TEMPERATURE RANGE		-10~+50°C		
STORAGE TEMPERATURE RANGE		-40~+60°C		
RESOLUTION CENTER/CORNER		CENTER 100lp/mm	CORNER 80lp/mm	
WEIGHT		105 g		

NOTE:Specifications and availability are subject to change without notice

注）本仕様については、予告なしに変更する場合があります。

		尺度 1/1	工場番号 HR947KW
		機種名 2/3" F2.5 f=75mm	
2019.11.13	繰出寸法変更		
2013.11.22	更新	機種番 LM75JC1MS 外観図	
2013.4.15	作成年月日		