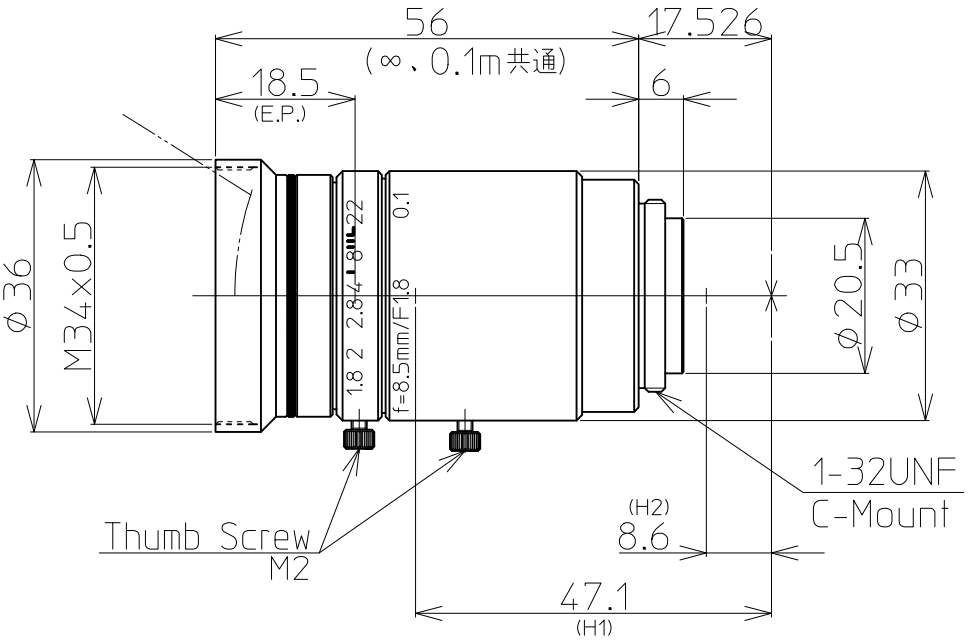

2/3" 1.8/8mm C		2/3"	1/1.8"	1/2"
FOCAL LENGTH		f=8.5mm		
MAX. DIAMETER (RATIO)		F=1:1.8~22		
ELEMENT		9 GROUPS 11 ELEMENTS		
PICTURE SIZE		6.6×8.8mm	5.4×7.2mm	4.8×6.4mm
ANGLE	VER. ANGLE	41.9°	34.8°	31.2°
	HOR. ANGLE	54.0°	45.3°	40.8°
	DIA. ANGLE	64.6°	55.0°	49.7°
DISTORTION (TV)		0.31%		
SHOOTIG RANGE AT	VER.	99.6mm	81.3mm	72.2mm
MINIMUM FOCUS	HOR.	133.2mm	108.7mm	96.5mm
DISTANCE	DIA.	166.5mm	136.3mm	121.0mm
MINIMUM FOCUS DISTANCE		0.1m		
FLANGE BACK		17.526mm in air		
BACK FOCUS		12.1mm in air		
FILTER SCREW SIZE		M34×0.5		
FRONT/REAR EFFECTIVE DIA.		FRONT φ26.7mm REAR φ13.1mm		
MOUNT		C-MOUNT		
EXIT PUPIL		-128.2		
TEMPERATURE RANGE		-10~+50°C		
STORAGE TEMPERATURE RANGE		-20~+60°C		
RESOLUTION CENTER/CORNER		CENTER 200lp/mm CORNER 140lp/mm		
LENS COATING		WIDE BAND MULTI COATING		
WEIGHT		115 g		

NOTE:Specifications and availability are subject to change without notice

注）本仕様については、予告なしに変更する場合があります。

		尺度 1/1	工場番号 LR1010KW
		機種名	2/3" F1.8 f=8mm
2014.12.25	更新	機種番	LM8JC10M 外観図
2013.4.15	作成年月日		