CONFIDENTIAL

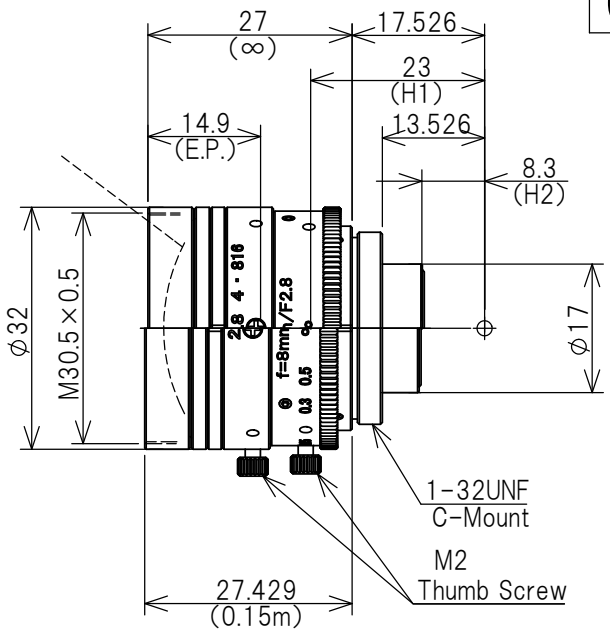

2/3″ 2.8/8mm C		2/3″	1/1.8″	1/2″
FOCAL LENGTH		f=8mm		
F-NUMBER		F=2.8-16		
PICTURE SIZE		6.6×8.8mm	5.4×7.2mm	4.8×6.4mm
ANGLE OF VIEW (∞)	VER.ANGLE	44.4°	36.7°	32.8°
	HOR.ANGLE	57.6°	48.1°	43.1°
	DIA.ANGLE	69.3°	58.8°	53.0°
DISTORSION (TV)		-0.85%	-0.95%	-0.87%
FIELD OF VIEW (MINIMUM FOCUS DISTANCE)	VER.	132mm	107mm	95mm
	HOR.	178mm	144mm	127mm
	DIA.	226mm	183mm	161mm
MINIMUM FOCUS DISTANCE		0.15m		
FLANGE BACK		17.526mm in air		
BACK FOCUS		10.8mm in air		
FILTER SCREW SIZE		M30.5×0.5		
FRONT/REAR EFFECTIVE DIA.		FRONT φ21.5mm REAR φ11.9mm		
MOUNT		C-MOUNT		
EXIT PUPIL		-42.8mm		
TEMPERATURE RANGE		-10～+50℃		
STORANGE TEMPERATURE RANGE		-20～+60℃		
RESOLUTION CENTER/CORNER		CENTER 160lp/mm CORNER 100lp/mm		
WEIGHT		55g		

NOTE:Specifications and availability are subject to change without notice
注）本仕様については、予告なしに変更する場合があります。

		尺度 1:1	工場番号 S10-632
2019/12/06	フィルタサイズ追加	機種名 2/3″ f=8mm F2.8 5MP	
2019/09/26	誤記訂正		
2019/02/08	作 成	機種番 LM8JC5MC 外観図	
日 付	内 容		