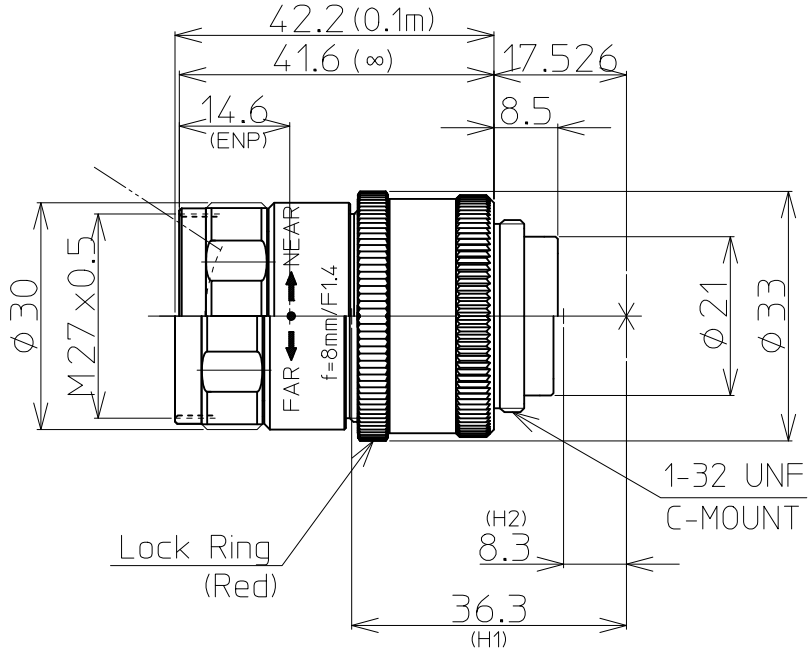

2/3" 1.4/8mm C		2/3"	1/1.8"	1/2"
FOCAL LENGTH		f=8mm		
MAX. DIAMETER (RATIO)		F=1:1.4,4,8,16		
PICTURE SIZE		6.6x8.8mm	5.4x7.2	4.8x6.4
ANGLE	VER. ANGLE	43.9°	36.3°	32.5°
	HOR. ANGLE	56.5°	47.4°	42.6°
	DIA. ANGLE	67.0°	57.4°	52.1°
DISTORTION (TV)		-0.6%		
WORKING DISTANCE OPTICAL MAGNIFICATION	500mm	0.016x		
	400mm	0.020x		
	300mm	0.027x		
	200mm	0.039x		
	100mm	0.075x		
MINIMUM FOCUS DISTANCE		0.1m		
FLANGE BACK		17.526 mm in air		
BACK FOCUS		9.74mm in air (Mechanical 9.1mm in air)		
FILTER SCREW SIZE		M27x0.5		
FRONT/REAR EFFECTIVE DIA.		FRONT φ17.5mm REAR φ15.6mm		
MOUNT		C-MOUNT		
EXIT PUPIL		214.3mm		
TEMPERATURE RANGE		-10~+50°C		
STORAGE TEMPERATURE RANGE		-20~+60°C		
RESOLUTION CENTER/CORNER		CENTER 100lp/mm CORNER 80lp/mm		
WEIGHT		88 g		

NOTE:Specifications and availability are subject to change without notice

注）本仕様については、予告なしに変更する場合があります。

		尺度 1/1	工場番号 HR973SR
		機種名	2/3" F1.4 f=8mm
2014.12.26	更新	機種番	LM8JCM-V 外観図
2014.6.9	作成年月日		